COUPLING SIMULATION OF TWO MICROSTRIP ANTENNAS ON A GENERIC AIRCRAFT

This test case deals with the coupling between two broad band microstrip antennas mounted on a generic aircraft. It shows the large savings in memory and computational time when using the Efield FDTD-FEM solver compared to standalone FDTD solvers when parts of the geometry need a much finer grid than needed to resolve the wavelength in the problem. This is often the case for antenna installation analysis.

Definition of Geometry

Geometrical configuration:

- Fuselage 18 m: Cylinder (15 m long, diameter 3 m) terminated by 2 half sphere.
- Wings span 18 m: conical section (half sphere, radius 0.2 m).
- Tail height 2.5 m. The same conical section as the wings.

Two microstrip antennas are mounted on the generic aircraft, the first position 2 m from the nose tip and the second 12 m from the nose tip.

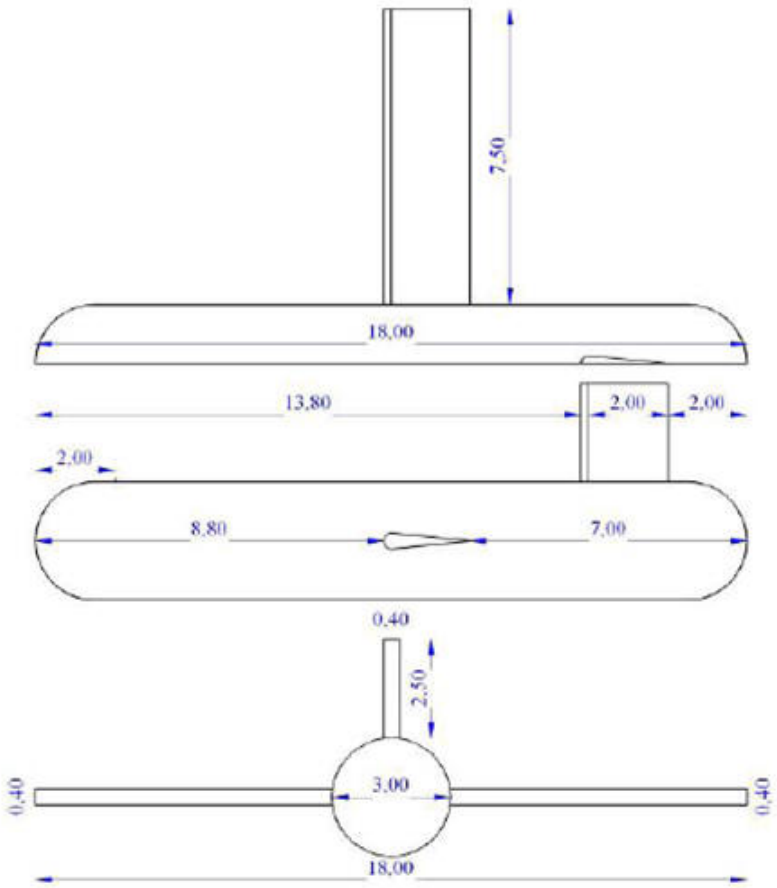

Figure 1: Definition of geometry of aircraft

Antenna Geometry

The geometrical configuration is shown in Figure 2 and Figure 3. Note that these dimensions are for antenna working in the frequency range of 1.5 GHz to 3.5 GHz. In our case the dimensions are scaled by a factor of 2.3 to get an antenna working in the frequency range from 0.5 GHz to 1.5 GHz

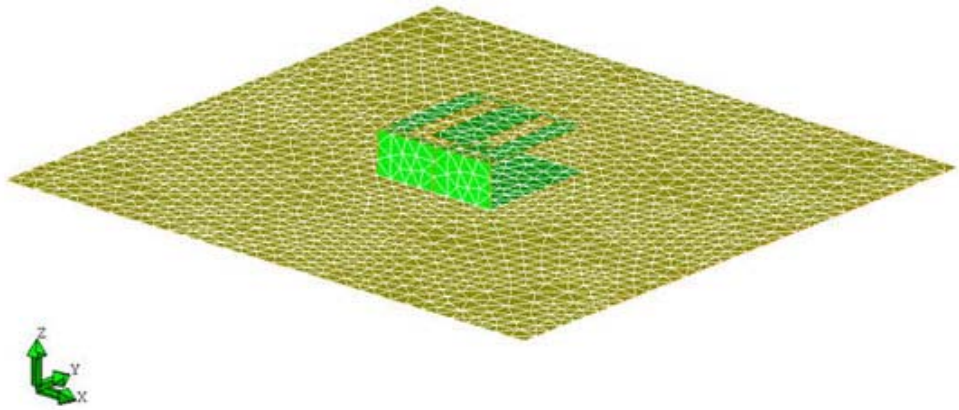

Figure 2: Microstrip antenna

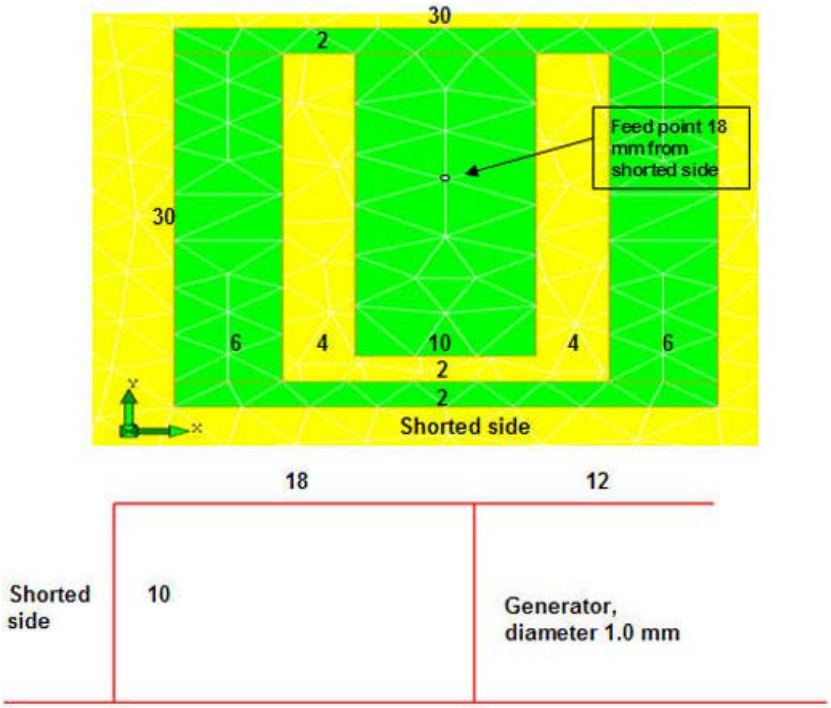

Figure 3: Geometry of microstrip antenna

Installed antenna

Figure 4 shows the installation of the antennas on the aircraft.

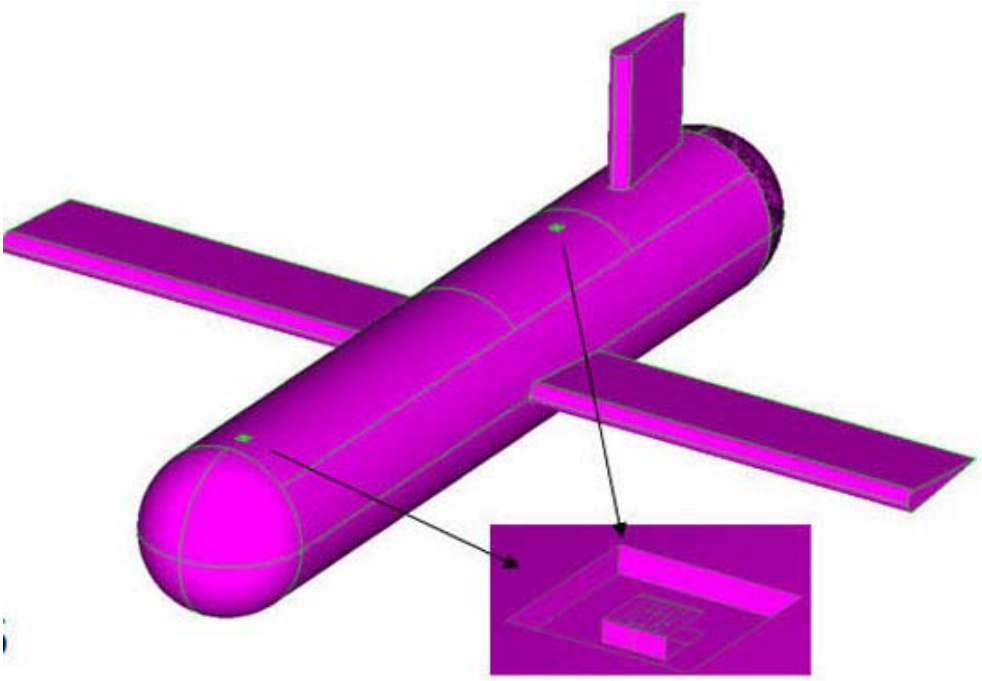

Figure 4: Installed microstrip antenna

Mesh generation

Figure 5 shows the transition between unstructured (FEM) and structured FDTD surface mesh close to microstrip antenna. Figure 6 shows the whole unstructured mesh region in magenta. The blue part is the structured FDTD surface mesh.

The Efield FDTD-FEM solver allows different mesh sizes in different parts of the model. This is not possible in standalone FDTD where the same cell size is used everywhere. In our case a FDTD cell size of 30 mm is used. The smallest dimension of the antenna is 4.6 mm and can not be represented using 30 mm cells. In the FEM part of the Efield FDTD-FEM solver we are allowed to have a finer mesh using tetrahedral elements and the smallest element size is set to 4.6 mm.

Mesh summary

- Cell size FDTD: 30 mm
- FDTD Lattice: 621 x 622 x 205
- Element size FEM: 4.6 mm
- Unknowns FEM: 13628 (antenna 1) and 13532 (antenna 2)

Note that using pure FDTD we would need a cell size of 4.6 mm (smallest dimension of antenna). Total number of cells grows with 63! Memory need in FDTD is Number of cells * 48 byte (to store E and H field in vacuum).

- Our model (cell size 30 mm): 621 x 622 x 205 x 48 b = 3.8 Gb
- Pure FDTD (cell size 4.6 mm): 621 x 622 x 205 x 63 x 48 b = 820 Gb!!

Copyright © Efield AB

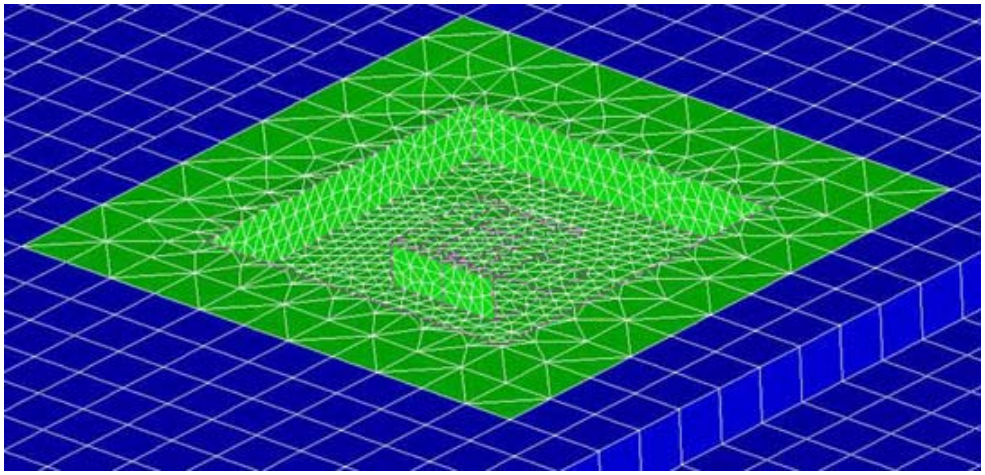

Figure 5: Unstructured surface mesh at microstrip antenna

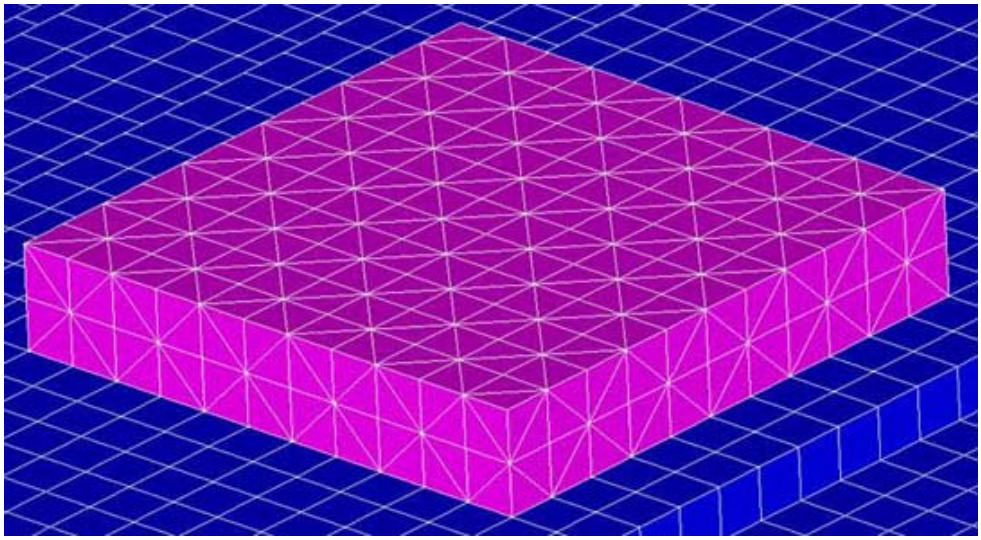

Figure 6: Unstructured surface mesh at transition region between FDTD and FEM domains

Simulation results

Coupling analysis between two microstrip antennas located 10 m apart integrated on a generic aircraft using the Efield FDTD-FEM solver using a thin wire approximation with a broad band excitation. The scattering parameters were computed in the frequency range 500 MHz to 1500 MHz.

Solver statistics

- Number of time steps: 20000
- Number of processors: 4
- Memory: 5.3Gb
- CPU-time: 24h

Copyright © Efield AB

In Figure 7 the scattering parameters are shown. In Figure 8 and 9 the surface currents on the aircraft and the microstrip antenna are shown. Finally in Figure 10 the far field antenna diagram of the installed microstrip antennas are shown.

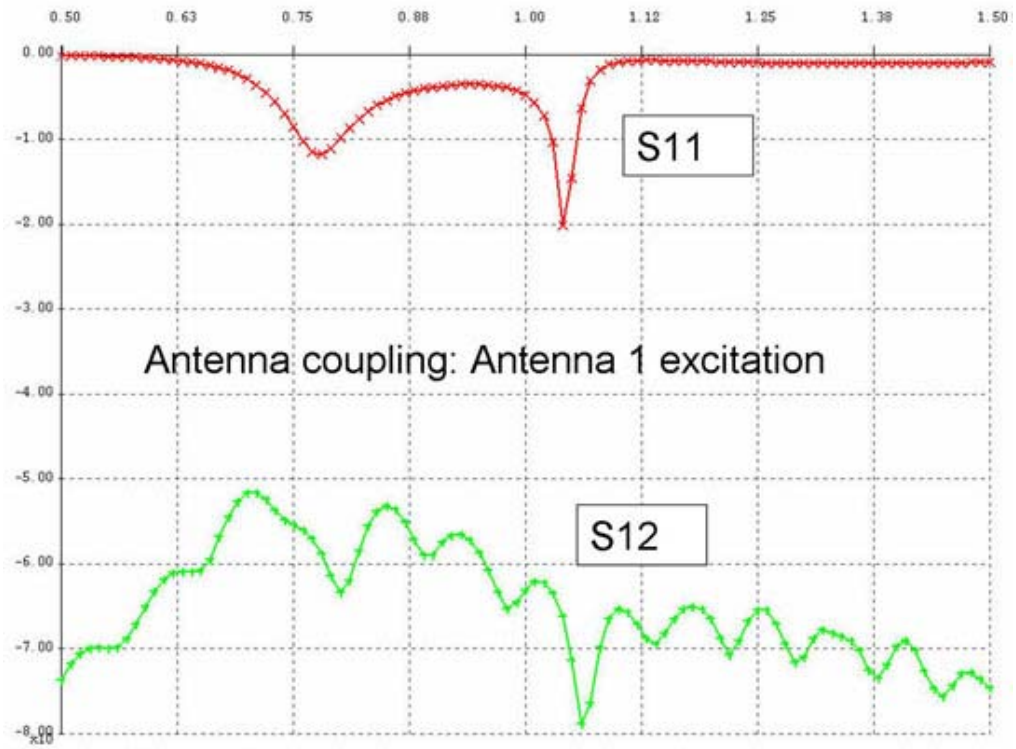

Figure 7: The coupling between the antennas installed on the generic aircraft

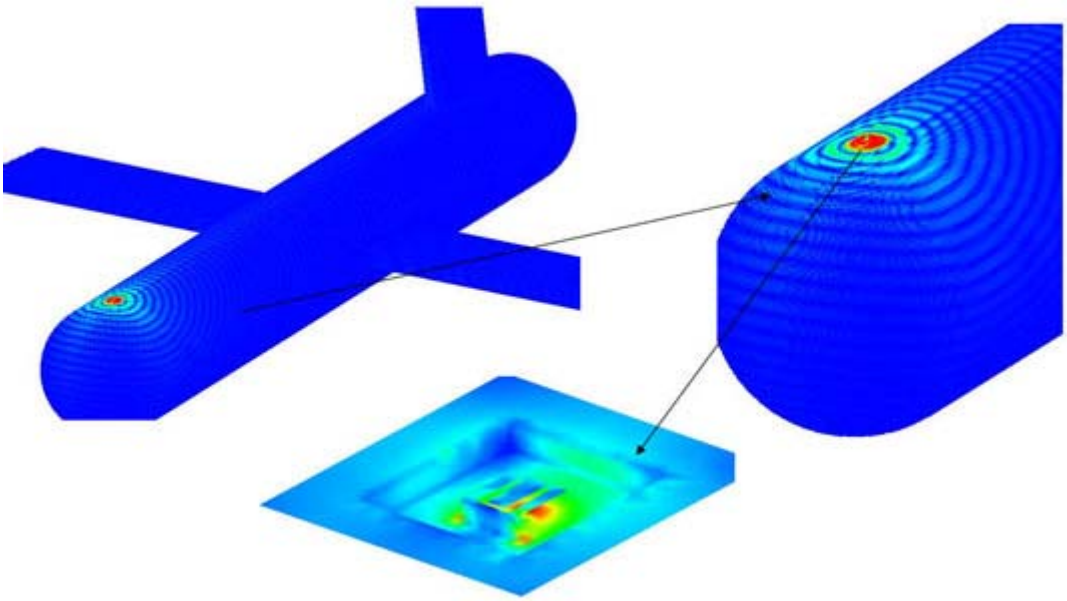

Figure 8: Surface currents on aircraft and microstrip antenna

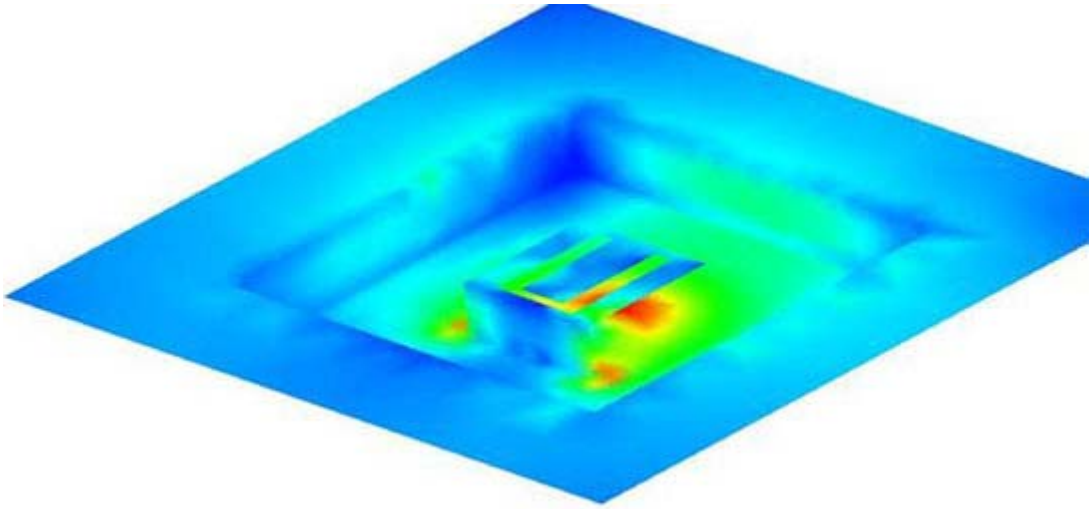

Figure 9: Surface currents at microstrip antenna 1

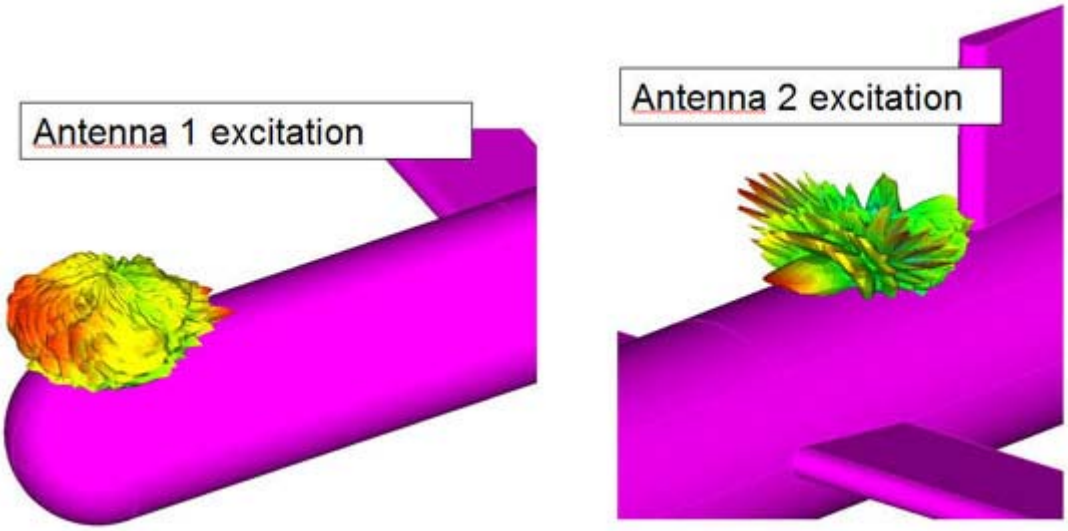

Figure 10: Far field antenna diagram of installed microstrip antennas

Efield AB, Skalholtsgatan 10 B,
SE-164 40 Kista, Sweden
Tel: +46 8 410 03 510
Email: contact@efieldsolutions.com
www.efieldsolutions.com